REVISION RECORD				
REV	ECO	DESCRIPTION	DRFT	CHKD

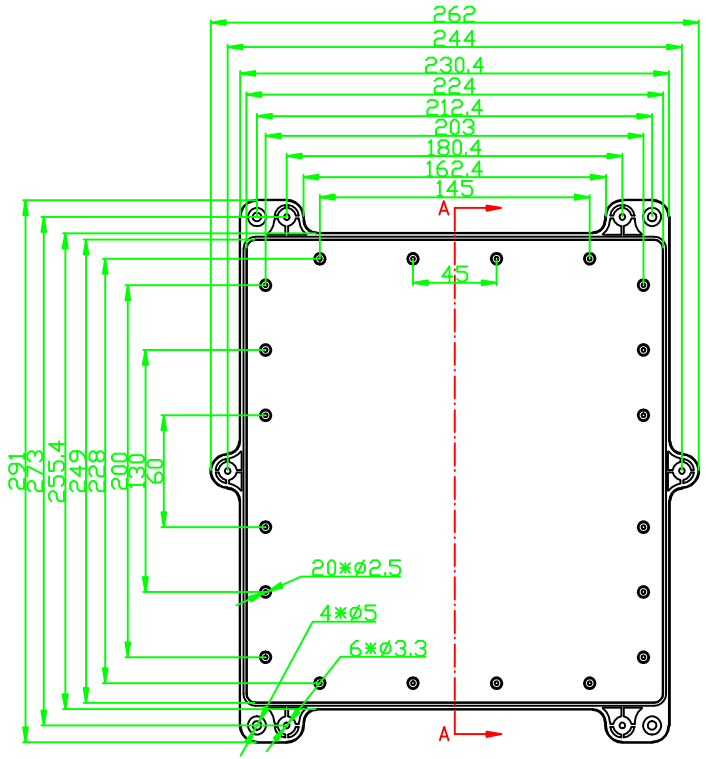

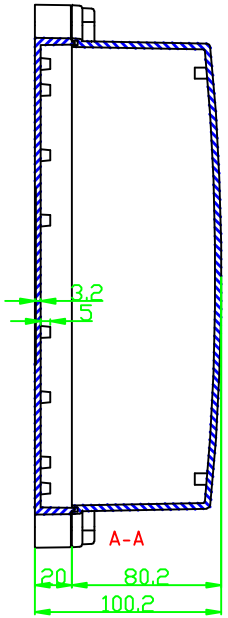

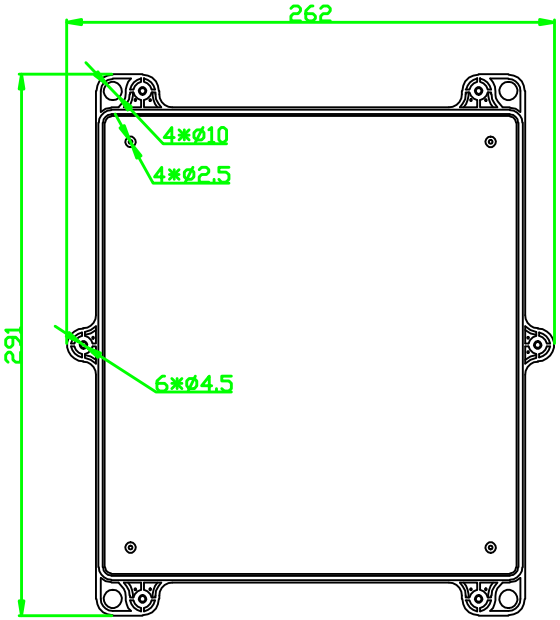

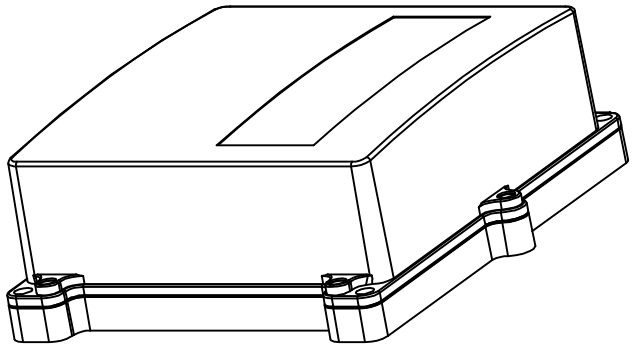

MM (INCH)		NAME	DATE
TOLERANCES EXCEPT AS NOTED	DRAWN	Kent	11/06/2015
	CHECKED		
ALL TOLERANCES IT13	ENG APPR.		
FOAM TOLERANCES:+/- 3mm	MATERIAL :	ABS	
CNC TOLERANCES:+/- 0.5mm	QT'Y :		
FIRST ANGLE PROJECTION	FINISH:		
	SCALE : 1:1		

DETACHED LISTS

EVEREST
WWW.EVERESTCASE.COM

TITLE

PW044S

DRAWING NO. PW044S
/PART NO. 00

SIZE A4 | REV

DO NOT SCALE DRAWING | SHEET 1 OF 1